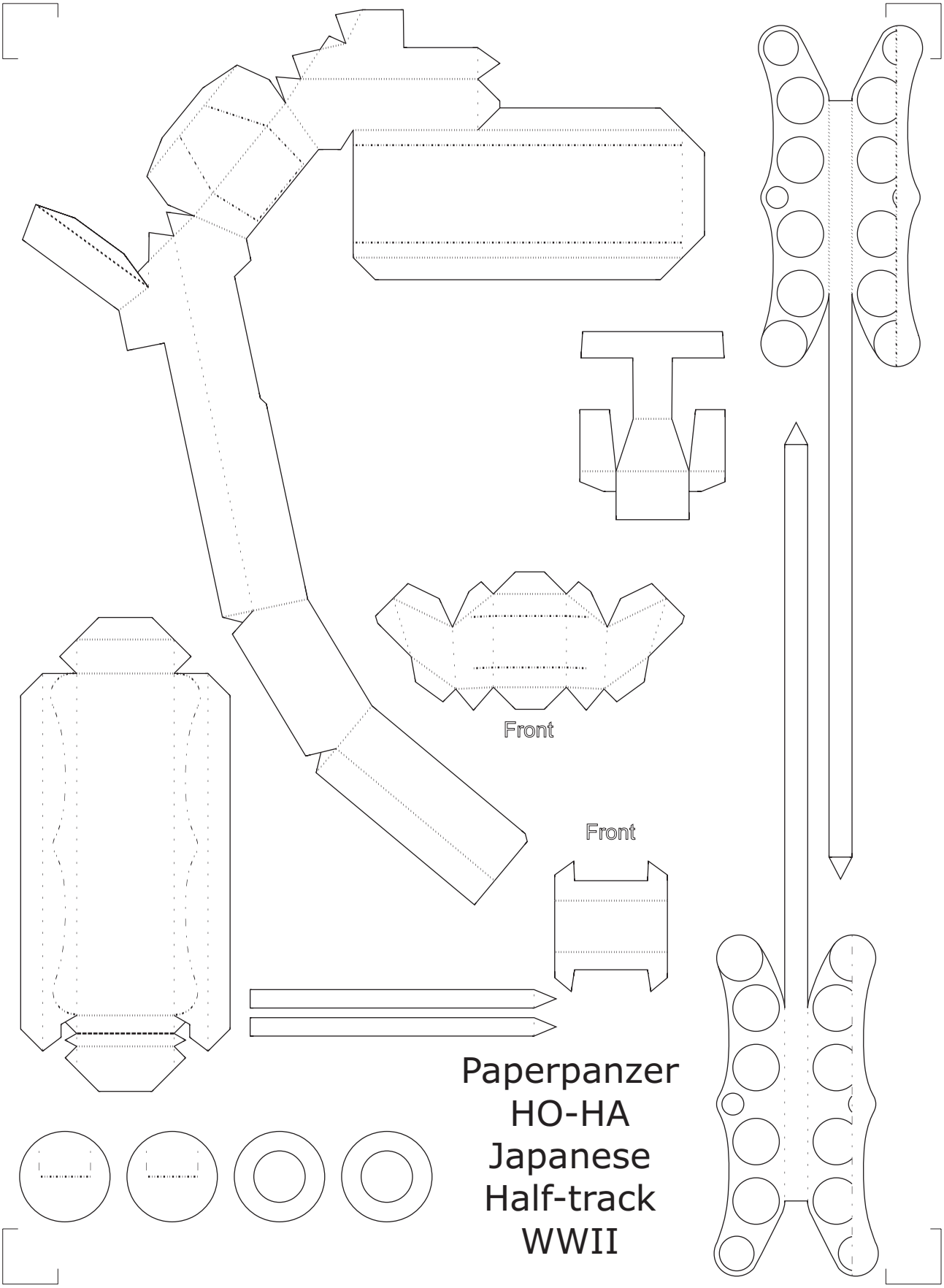

Paperpanzer HO-HA Japanese Half-track WWII